Q2:

Column BC (side sway uninhibited (unbraced frame))

Assume $K_y)_{BC} = 0.65$

Column AB (side sway inhibited (braced frame)):

Assume $K_y)_{AB} = 0.65$

Column BC:

$KL)_y = 0.65 * 12 = 7.8$ ft

Try: W14 x 43 : $\frac{P_n}{\Omega} = 313$ K

W12 x 40 : $\frac{P_n}{\Omega} = 292$ K

W10 x 39 : $\frac{P_n}{\Omega} = 301$ K

W8 x 35 : $\frac{P_n}{\Omega} = 261$ K ⇐ To be used (the lightest)

$I_x = 127$ in^4, $I_y = 42.6$ in^4

Column AB:

$KL)_y = 0.65 * 15 = 9.75$ ft

$\frac{4}{20}$

Try: W14 x 99 : $\frac{P_n}{\Omega} = 808$ K

W12 x 96 : $\frac{P_n}{\Omega} = 756$ K ⇐ To be used (the lightest)

W10 x 100 : $\frac{P_n}{\Omega} = 758$ K

Checking column capacity about y-axis:

Column AB, (braced)

$G_A = 1.0$ fixed

$$G_B = \frac{\frac{270}{15} + \frac{42.6}{12}}{\frac{3270}{24}} = 0.158$$

$\frac{4}{20}$

Enter chart page 241 (AISC 360) ⇒ $K_{AB} = 0.67$

$\therefore KL_{AB})_y = 0.67 * 15 = 10.05$ ft > 10 ft

$K_{AB} = 0.67$ (by interpolation)

University of Baghdad
College of Engineering
Civil Eng. Department

4th Year
Time: 3 hours
Date: 22/6/2013

Structural Steel Design
Final Examination 1st Attempt
Instructors: (Dr. Ala'a H. Al-Zuhairi & Dr. Ahmad J. H. Al-Shimmeri)

Note: Answer **FIVE** questions only.

Q1(20%): Design the double angle tension member bf of A36-steel (F_y = 36 ksi and F_u = 58 ksi) in the truss shown by LRFD method connected using 1" diameter bolts of a nominal shear strength of 60 ksi. Design the connection and sketch the details.

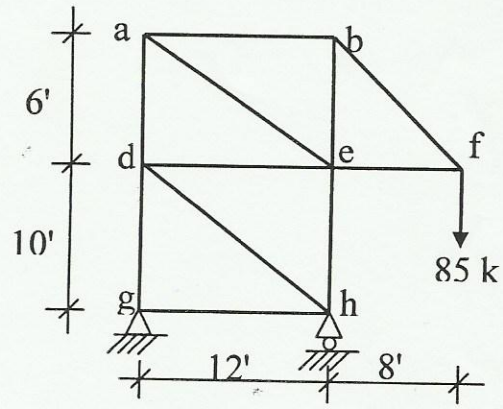

Q2(20%): Select the lightest W-shape (ASTM A992) F_y = 50 ksi for columns (AB) & (BC) in the frame shown

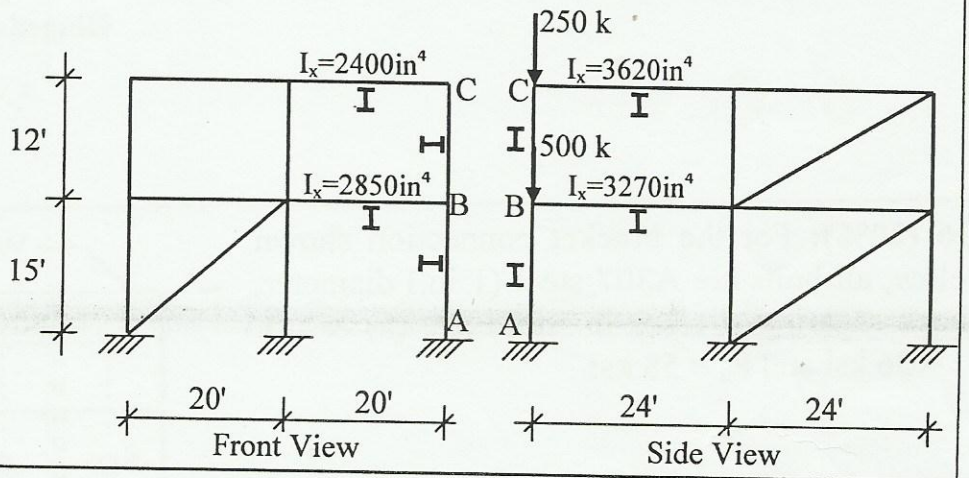

Q3(a)(15%): The W30×99 shown has lateral support supplied at midspan as well as at its ends. A uniform service load of 1.2 k/ft, including the beam weight, is placeds on the beam for its full length. If F_y = 50 ksi, determine the maximum live load (P_L) using LRFD method.

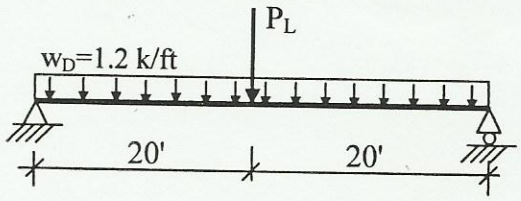

(b) (5%): Compute bending coefficient "C_b" for the beam shown below.

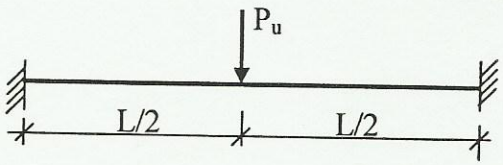

Q4(20%): For the plate gider shown, find the spacings a_1 and a_2 of intermediate stiffeners. Use tension field action if permitted and F_y = 36 ksi. Adopt ASD method.

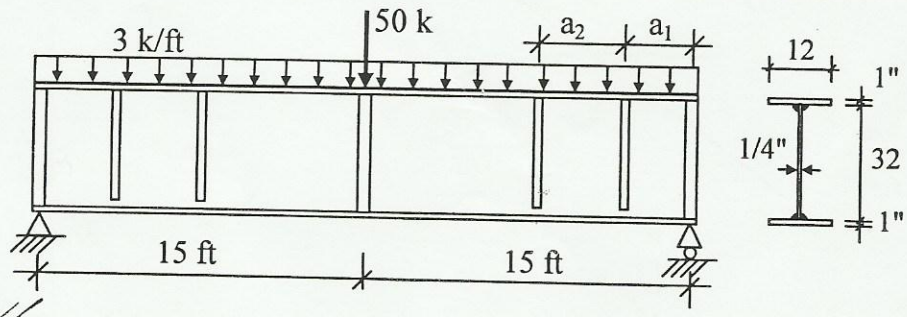

Q5(20%): The W30×211 beam-column is hinged at the upper and lower ends in both directions. If (F_y = 50 ksi), determine the maximum permissible value of the transverse distributed load (w).

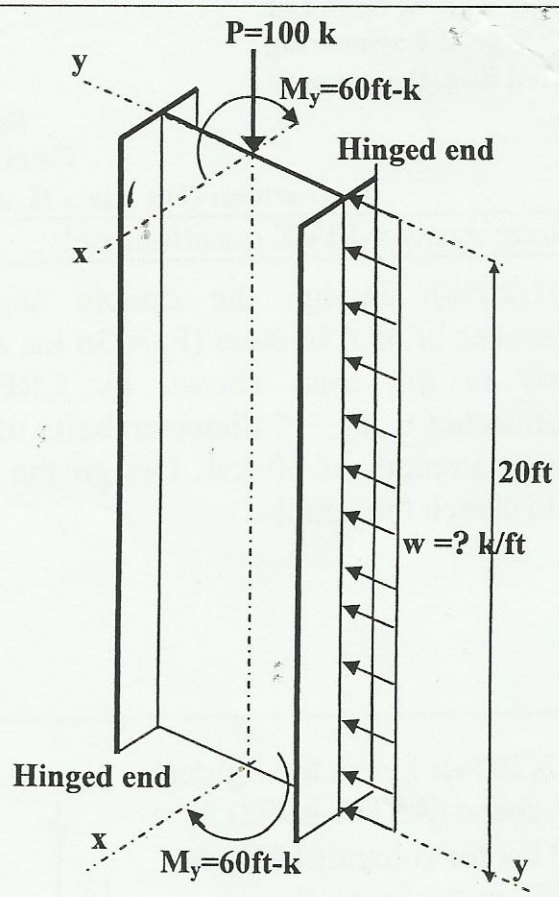

Q6 (20%): For the bracket connection shown below, all bolts are A307 steel-(1 in.) diameter, check shearing stresses in the bolts (a) & (d). F_y = 36 ksi and F_u = 58 ksi.

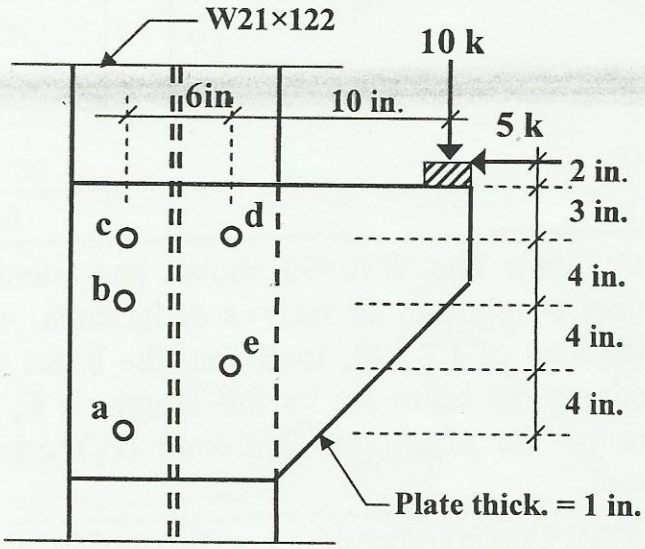

Best wishes

(D1)

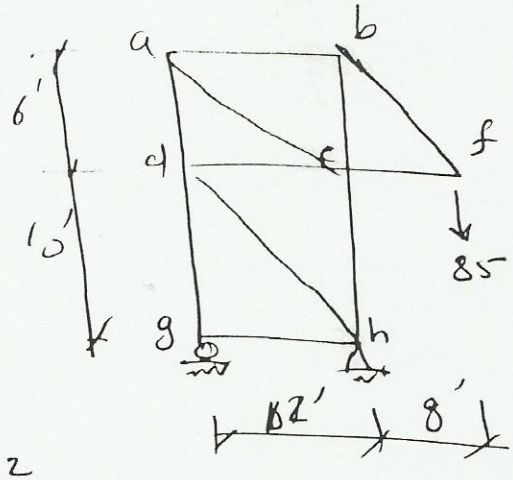

$P_{bf} = \frac{85}{6} * 10 = 141.7^{K}$

<u>ASD</u> Method:

$R_n = \frac{F_y}{\Omega} A_g$, $R_n = P_{bf}$

$\therefore A_g = \frac{1.67 * 141.7}{36} = 6.57 \text{ in}^2$

$R_n = \frac{F_u}{\Omega} A_e$

8/20 $A_e = \frac{1.67 * 141.7}{58} = 4.08 \text{ in}^2$

Try 2L 4x4x 7/16 gives $A_g = 6.61 \text{ in}^2$

use one line of bolts: No. of bolts $= \frac{141.7}{(1)^2 * \frac{\pi}{4} * \frac{60}{2} * 2} = 3.008$

use 4 bolts or 3 bolts

$A_n = \left[6.61 - (1 + \frac{1}{8})\right] * \frac{7}{16} * 2 = 4.799 \text{ in}^2$

$A_e = U A_n$

$U = 1 - \frac{\bar{x}}{L} = 1 - \frac{1.15}{9} =$
$= 0.872$

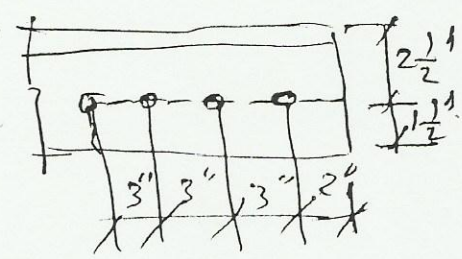

$\therefore A_e = 0.872 * 4.799 = 4.186 \text{ in}^2 > 4.08 \text{ in}^2$

$\therefore$ ok

2/20 Check $\frac{L}{r_{min}} = \frac{10 * 12}{0.777} = 154.4 < 300$ $\therefore$ ok

<u>Check bearing stress</u> 5/20

$R_n = 1.2 L_c t F_u \leq 2.4 d_b t F_u$

$L_c = 2 - \frac{1}{2}(1 \frac{1}{8}) = 1.437 \text{ in} \leq 4.5$

$\therefore L_c = 1.437$ in

$\therefore R_n = 1.2 * 1.437 * \frac{7}{16} * 58 \leq 2.4 * 1 * \frac{7}{16} * 58$

$= 43.7$ k

60.9 k

$\therefore R_n = 43.7$

$\therefore R = \frac{R_n}{\Omega} = \frac{43.7}{2} = 21.85$ K

$\therefore$ OK $> \frac{141.7}{2*4} = 17.71$ k

Check block shear

$R_n = 0.6 F_u A_{nv} + U_{bs} F_u A_{nt} \leq 0.6 F_y A_{gv} + U_{bs} F_u A_{nt}$

$= 0.6 * 58 * [11 - 3.5 * (1 + \frac{1}{8})] * \frac{7}{16} + 1.0 * 58 * [1.5 - (1 + \frac{1}{8}) \frac{1}{2}] * \frac{7}{16}$

$= 131.3$ kip

$\leq 0.6 * 36 * 11 * \frac{7}{16} + 1.0 * 58 * 1.5 * \frac{7}{16}$

$= 142.0$ K

$\therefore R_n = 131.3$ kips

$\therefore R = \frac{R_n}{\Omega} = \frac{131.3}{2.0} = 65.65$ K $< \frac{141.7}{2} = 70.85$ k

$\therefore$ N.G

use edge distance of 3" instead of 2"

$\therefore R_n = 0.6 * 58 [12 - 3.5 (1 + \frac{1}{8})] * \frac{7}{16} + 1.0 * 58 * [1.5 - \frac{1}{2}(1 + \frac{1}{8}) * \frac{1}{2}] * \frac{7}{16}$

$= 146.5$ K

$\leq 0.6 * 36 * 12 * \frac{7}{16} + 1 * 58 * 1.5 * \frac{7}{16}$

$= 151.5$

$\therefore$ use $R_n = 146.5$ K

$\therefore R = \frac{146.5}{2} = 73.25 > \frac{141.7}{2} = 70.85$ k $\therefore$ OK

$$\left.\frac{P_n}{\Omega}\right)_{KL_{AB}=10.05} = 756 - \left(\frac{756-736}{1}\right) * 0.05 = 755^{K} > 750^{K} \quad \therefore ok$$

Column BC: (braced)

$G_B = 0.158$

$$G_C = \frac{\frac{42.6}{12}}{\frac{3620}{24}} = 0.024$$

Enter chart (page 241) $\Rightarrow K_{BC} = 0.54$

$\therefore KL_{BC})_y = 0.54 * 12 = 6.48 \text{ ft} < 7.8 \text{ ft} \quad \therefore ok$

Checking column capacity about x-axis.

Column (AB) (braced):

$G_A = 1.0$ (fixed)

$$G_B = \frac{\frac{833}{15} + \frac{127}{12}}{\frac{2850}{20}} = 0.464$$

$\frac{4}{20}$

Enter chart (page 241) $\Rightarrow K_{AB} = 0.735$

$\therefore KL_{AB})_x = 0.735 * 15 = 11.025 \text{ ft}$

$$\frac{KL_{AB}}{r_x/r_y} = \frac{11.025}{1.76} = 6.264 \text{ ft} < 10.05 \text{ ft} \quad \therefore ok$$

Column BC (unbraced)

$G_B = 0.464$

$$G_C = \frac{\frac{127}{12}}{\frac{2400}{20}} = 0.088 \Rightarrow \text{Enter chart Page 242}: K_{BC} = 1.12$$

$\therefore KL_{BC})_x = 1.12 \times 12 = 13.44 \text{ ft}$

$\frac{4}{20}$

$$\frac{KL_{BC})_x}{r_x/r_y} = \frac{13.44}{1.73} = 7.77 \text{ ft} < 7.8 \text{ ft} \quad \therefore ok$$

$\therefore$ Use: W12 x 96 for column AB

and W8 x 35 for column BC

Q3.(a):

LRFD: 1- From Bending:

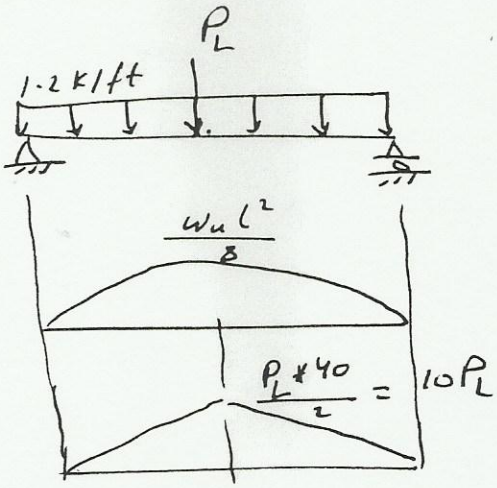

$w_D = 1.2$ k/ft

$w_u = 1.2 * 1.2 = 1.44$ k/ft

$P_u = 1.6 P_L$, $P_L = ?$

$M_{max})_D = \frac{1.44 * (40)^2}{8} = 288$ ft-k

$M_{max})_L = 10 * 1.6 P_L = 16 P_L$

$M_{max} = 288 + 16 P_L$

For the given section: W30x99 :-

$L_p = 7.42$ ft , $L_r = 21.4$ ft

$\therefore L_p < L_b < L_r$ $\therefore$ use:

$M_R = C_b [\phi M_p - BF (L_b - L_p)] \leq \phi M_p$

$C_b = 1.3$ for uniformly d.L. , $C_b = 1.67$ for concentrated load.

$\therefore$ Use the min. value of $C_b = 1.3$

$BF = 33.3$ kips for W30x99
$\phi M_p = 1170$ ft-k (page 3-15)

$\therefore M_R = 1.3 * [1170 - 33.3 (20 - 7.42)] \leq 1170$

$= 976.4$ ft-k < 1170 ft-k $\therefore$ ok

$\therefore 976.4 = 288 + 16 P_L$

$\frac{9}{15}$

$\therefore P_L = 43$ k

2- From shear:

Max. shear force $= 1.44 * \frac{40}{2} + \frac{1.6 P_L}{2} = 28.8 + 0.8 P_L$

$\phi V_n = 463$ k (page 3-15)

$\therefore 463 = 28.8 + 0.8 P_L \Rightarrow P_L = 542.7$ k

$\therefore P_L = \min.(43, 542.7) = \underline{43 \text{ k (ans.)}}$

$\frac{3}{15}$

Check deflection

$$\text{Max defl.} = \frac{5 * 1.44 * (40)^4 * (12)^3}{384 * 29000 * 3990} + \frac{43 * (40)^3 * (12)^3}{48 * 29000 * 3990}$$

$$= 1.573 \text{ in} > \frac{40 * 12}{360} = 1.333 \quad \text{N.G.}$$

Check with L.L only:

$$\text{Max. deflection} = \frac{43 * (40)^3 * (12)^3}{48 * 29000 * 3990} = 0.856'' < 1.333 \quad \therefore \checkmark$$

b):

$$\frac{5}{20}$$

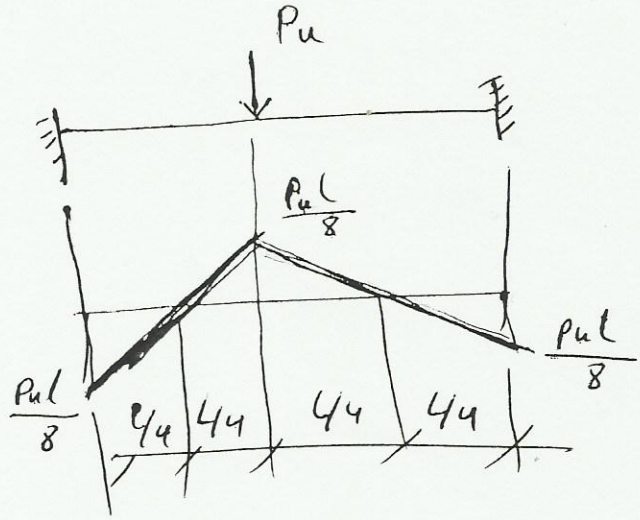

$$C_b = \frac{12.5 M_{max}}{2.5 M_{max} + 3 M_A + 4 M_B + 3 M_C} R_m$$

$$= \frac{12.5 * \left(\frac{P_u l}{8}\right)}{2.5\left(\frac{P_u l}{8}\right) + 0 + 4\left(\frac{P_u l}{8}\right) + 0} R_m$$

$$= \frac{12.5}{6.5} = 1.923 R_m$$

$$\therefore C_b = 1.923 R_m$$

Q4:

$$\frac{h}{t_w} = \frac{32}{\frac{1}{4}} = 128 < 260$$

$$V_a = \frac{30 \times 30}{2} + \frac{50}{2} = 70\ K$$

Assume $k_v = 5$

$$1.1\sqrt{\frac{k_v E}{F_y}} = 1.1 * \sqrt{\frac{5 * 29000}{36}} = 63.5$$

$$\therefore \frac{h}{t_w} = 128 > 63.5$$

$$1.37\sqrt{\frac{k_v E}{F_y}} = 1.37 * \sqrt{\frac{5 \times 29000}{36}} = 86.95$$

$$\because \frac{h}{t_w} > 1.37\sqrt{\frac{k_v E}{F_y}}$$

$$\therefore C_v = \frac{1.51}{\left(\frac{h}{t_w}\right)^2} * \frac{k_v E}{F_y}$$

$$= \frac{1.51}{(128)^2} * \frac{5 * 29000}{36} = 0.38$$

$$\frac{V_n}{\Omega} = \frac{0.6 * 34 * 0.25 * 36 * 0.38}{1.67} = 41.78\ k < 70\ k$$

Let $V_{actual} = V_{all} = \frac{V_n}{\Omega}$

$$70 = \frac{0.6 * 34 * 0.25 * 36 * C_v}{1.67} \Rightarrow C_v = 0.64$$

asume $\frac{h}{t_w} > 1.37\sqrt{\frac{k_v E}{F_y}}$

$$\therefore C_v = \frac{1.51}{\left(\frac{h}{t_w}\right)^2} * \frac{k_v E}{F_y}$$

$$0.64 = \frac{1.51}{(128)^2} * \frac{k_v * 29000}{36} \Rightarrow k_v = 8.62$$

check $1.37 * \sqrt{\frac{k_v E}{F_y}} = 1.37 * \sqrt{\frac{8.62 * 29000}{36}} = 114.17$

$\therefore \frac{h}{t_w} > 1.37\sqrt{\frac{k_v E}{F_y}}$ $\quad \therefore$ OK

$$\therefore \quad k_v = 5 + \frac{5}{\left(\frac{a}{h}\right)^2}$$

$$8.62 = 5 + \frac{5}{\left(\frac{a}{h}\right)^2} \Rightarrow \frac{a}{h} = 1.179$$

$$\therefore \quad a = 1.179 * 32 = 37.73$$

use $a = 37.5'' = a_1$ <u>(ans.)</u>

<u>2nd I.S.</u> (T.F.A) is permitted

$$V_{max_2} = 70 - \frac{37.5}{12} * 3 = 60.62$$

$$\frac{V_{max}}{A_w} = \frac{60.62}{34 * \frac{1}{4}} = 7.13$$

Check applicability of T.F.A

(a) not end panel.

(b) $\frac{a}{h} < 3$, or $\frac{a}{h} < \left(\frac{260}{h/t_w}\right)$

(c) $\frac{2A_w}{A_{fc} + A_t} \leq 2.5 \Rightarrow \frac{2 * 34 * \frac{1}{4}}{2 * 12 * 1} = 0.708 < 2.5$ $\therefore$ <u>ok</u>

(d) $\frac{h}{b_{fc}} < 6 \Rightarrow \frac{32}{12} = 2.67 < 6.0$ $\therefore$ <u>ok</u>

$\therefore$ T.F.A. is permitted.

Enter chart page (3-151):

$$\frac{a}{h} > 3.0$$

use $\frac{a}{h} = 3.0$

or $\frac{a}{h} = \frac{260}{128} = 2.031 \Leftarrow$ used.

$$\therefore \quad a = 2.031\,h = 2.031 * 32 = 64.992''$$

use $a_2 = 64.5''$ <u>(ans.)</u>

$\frac{8}{20}$

Q5:

W30X211 : $A_g = 62.2\ in^2$, $r_x = 12.9''$, $r_y = 3.49''$

$I_x = 10300\ in^4$, $I_y = 757\ in^4$

$P_r = 120\ K$

$P_c = \frac{F_{cr}}{\Omega} A_g$

$\left.\frac{KL}{r}\right)_y = \frac{1 * 20 * 12}{3.49} = 68.77$

Enter Table (4-22), for $\left.\frac{KL}{r}\right)_y = 69$; $\frac{F_{cr}}{\Omega} = 21.1\ ksi$

$\therefore P_c = 21.1 * 62.2 = 1312.4$ kipps

$\therefore \frac{P_r}{P_c} = \frac{100}{1312.4} = 0.0762 < 0.2$ $\therefore$ Use the 2nd modified Eqn.

$\frac{1}{2} \rho P_r + \frac{9}{8}[b_x M_{rx} + b_y M_{ry}] \leq 1.0$

$M_{ax} = \frac{w l^2}{8} = \frac{w * 20^2}{8} = 50w$ $\frac{6}{20}$

Find magnification factor $B_1)_x$

$B_1)_x = \frac{C_{mx}}{1 - \alpha \frac{P_r}{P_{e1}}}$

$C_{mx} = 1.0$ (unrestrained)

$\alpha = 1.6$ (ASD method)

$P_{e1})_x = \frac{\pi^2 E I_x}{(KL)_x^2} = \frac{\pi^2 * 29000 * 10300}{(1 * 20 * 12)^2} = 51130\ K$

$\therefore B_1)_x = \frac{1}{1 - 1.6 * \frac{100}{51130}} = 1.003 \simeq 1.0$ $\frac{4}{20}$

$\therefore M_{rx} = B_1)_x M_{ax} = 1.0 * 50w = 50w$

Find magnification factor $B_1)_y$

$B_1)_y = \frac{C_{my}}{1 - \alpha \frac{P_r}{P_{e1}}}$

$$P_{el})_y = \frac{\pi^2 E I_y}{(KL_y)^2} = \frac{\pi^2 * 29000 * 757}{(1*20*12)^2} = 3758 \text{ K}$$

$$\therefore B_1)_y = \frac{0.2}{1 - 1.6\left(\frac{100}{3758}\right)} = 0.209 < 1.0 \quad \therefore \text{use } B_1)_y = 1.0$$

$$M_{ry} = B_1)_y * M_{ay} = 1 * 60 = 60 \text{ ft-k}$$

To find p, bx and by Enter Table (6-1)

For KL = 20 ft, W 30 X 211

$p * 10^3 = 0.759 \Rightarrow p = 0.759 * 10^{-3}$

$b_x * 10^3 = 0.533 \rightarrow b_x = 0.533 * 10^{-3}$

$b_y * 10^3 = 2.30 \Rightarrow b_y = 2.30 * 10^{-3}$

$\frac{6}{20}$

Now apply the modified function:

$$\frac{1}{2} * 0.759 * 10^{-3} * 100 + \frac{9}{8}\left[0.533 * 10^{-3} * 50w + 2.30 * 10^{-3} * 60\right] = 1$$

$\therefore w = 232.5$ k/ft <u>(ans.)</u>

Q6:

$$\bar{x} = \frac{2A*6}{5A} = 2.4''$$

$$\bar{y} = \frac{A*4 + A*8 + A*12}{6A} = 4''$$

$$\Sigma \bar{x}^2 = 3*(2.4)^2 + 2*(6-2.4)^2 = 43.2 \text{ in}^2$$

$$\Sigma \bar{y}^2 = 2*(4)^2 + 1*(4)^2 + 1*(8)^2 = 112 \text{ in}^2$$

$$M_c = 10*(10+6-2.4) - 5*(2+3+4) = 91 \text{ in-k}$$

$$P_x = \frac{5}{6} = 0.83 \text{ k} \leftarrow$$

$$P_y = \frac{10}{6} = 1.67 \text{ k} \downarrow \qquad \frac{5}{20}$$

$$F_x)_a = \frac{M_c * \bar{y}_a}{\Sigma \bar{x}^2 + \Sigma \bar{y}^2} = \frac{91*8}{43.2+112} = 4.69 \text{ k} \leftarrow$$

$$F_y)_a = \frac{M_c * \bar{x}_a}{\Sigma \bar{x}^2 + \Sigma \bar{y}^2} = \frac{91*2.4}{43.2+112} = 0.59 \text{ k} \uparrow$$

$$R_x)_a = P_x + F_x)_a = 0.83 + 4.69 = 5.52 \text{ k} \leftarrow$$

$$R_y)_a = P_y + F_y)_a = 1.67 - 0.59 = 1.08 \text{ k} \downarrow$$

$$\therefore R_a = \sqrt{R_x)_a^2 + R_y)_a^2} = \sqrt{(5.52)^2 + (1.08)^2} = 5.62 \text{ k} \qquad \frac{5}{20}$$

$$F_x)_d = \frac{M_c * \bar{y}_d}{\Sigma \bar{x}^2 + \Sigma \bar{y}^2} = \frac{91*4}{43.2+112} = 2.35 \text{ k} \rightarrow$$

$$F_y)_d = \frac{M_c * \bar{x}_d}{\Sigma \bar{x}^2 + \Sigma \bar{y}^2} = \frac{91*(6-2.4)}{43.2+112} = 2.11 \text{ k} \downarrow$$

$$R_x)_d = P_x + F_x)_d = -0.83 + 2.35 = 1.52 \text{ k} \rightarrow$$

$$R_y)_d = P_y + F_y)_d = 1.67 + 2.11 = 3.78 \text{ k} \downarrow$$

$$\therefore R_d = \sqrt{R_x)_d^2 + R_y)_d^2} = \sqrt{(1.52)^2 + (3.78)^2} = 4.07 \text{ k} \qquad \frac{5}{20}$$

shearing stresses:

$$\tau_a = \frac{R_a}{A_b} = \frac{5.62}{\pi * \frac{1}{4} * 2} = 3.58 \text{ ksi} < \frac{24}{2} = 12 \text{ ksi for A307 bolts}$$

See Table J3.2

$$\tau_d = \frac{R_d}{\ldots} = \frac{4.07}{\ldots} = 2.59 \text{ ksi} < \frac{24}{\ldots} = 12 \text{ ksi} \qquad \therefore \text{ok} \qquad \frac{5}{20}$$